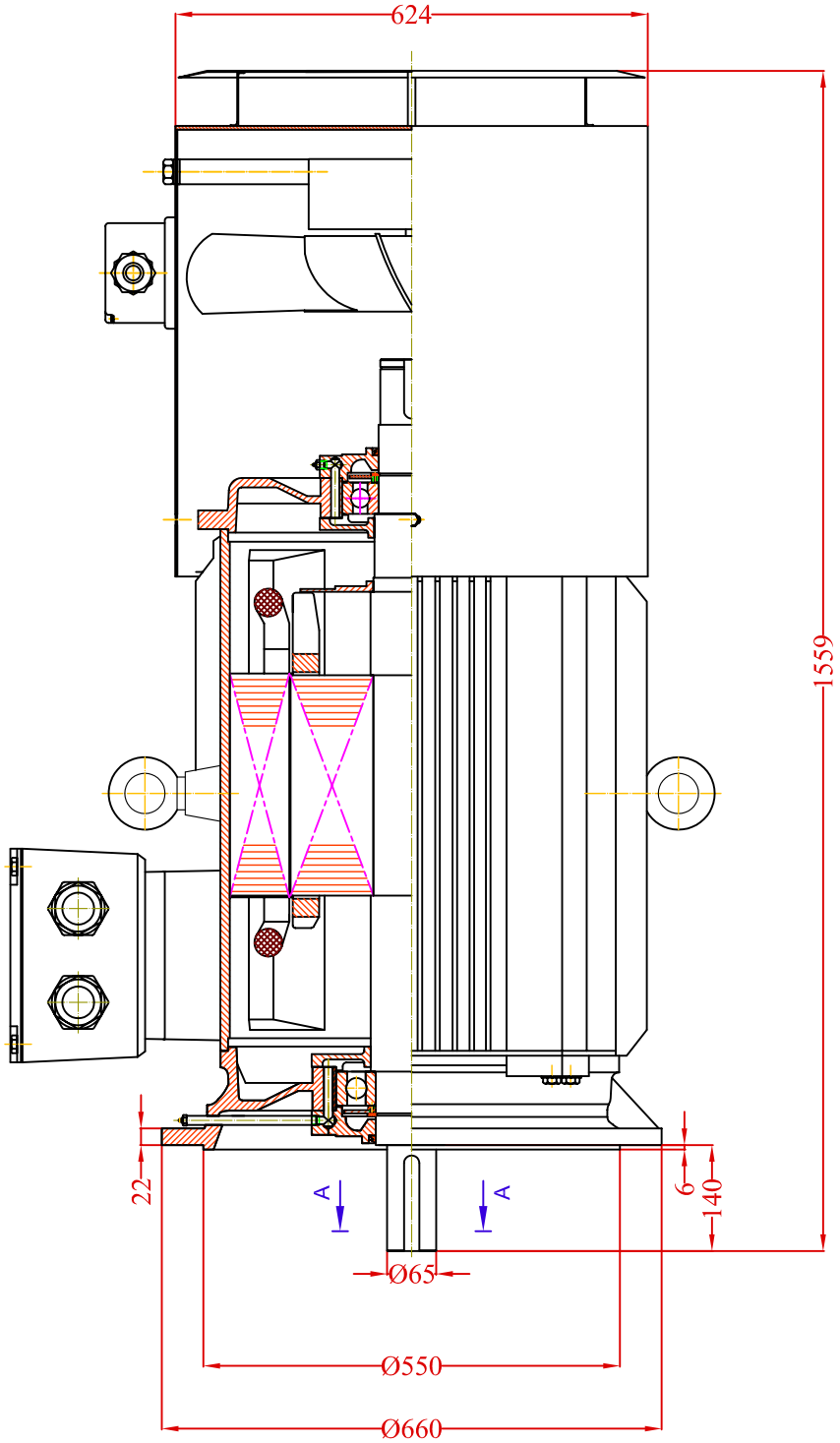

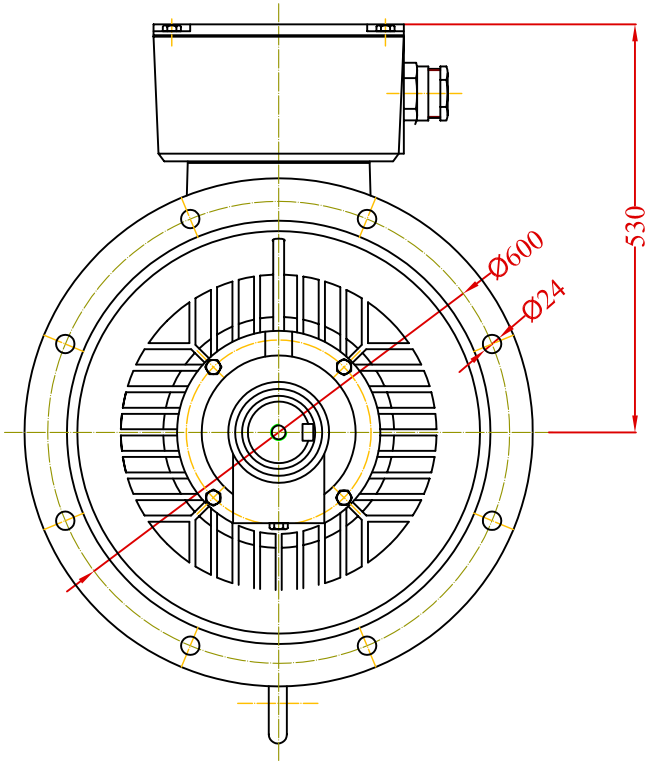

A-A

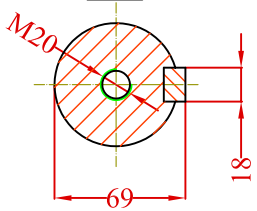

				Date	Signature	
			Designed by			
			Checked by			Weight
			Examine by			
			SCALE	MOTOR TYPE K315S-2 MOUNTING V1 WITH FORCED COOLING KIT		Desing Number
						Replaced from
						Replace the
CHANGE	DATE	NAME				

VALIADIS
HELLENIC MOTORS