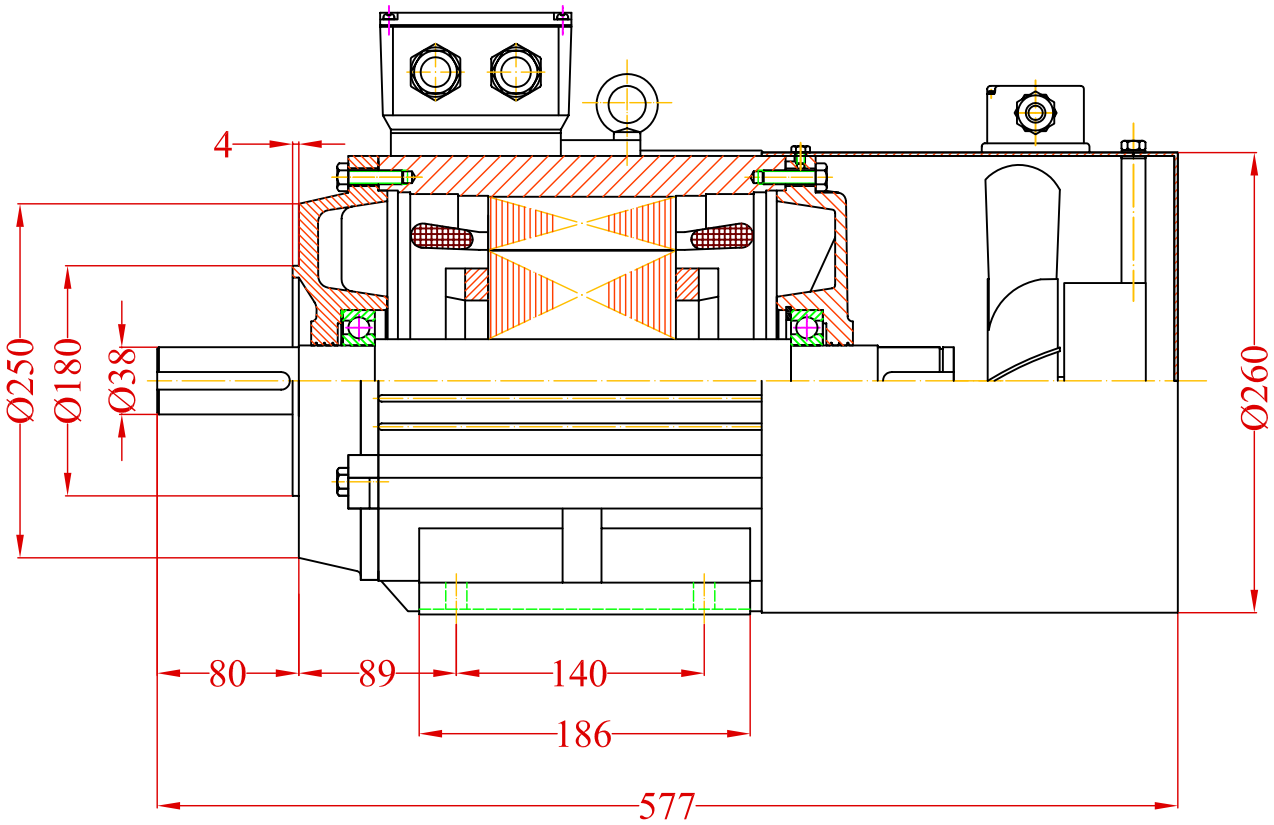

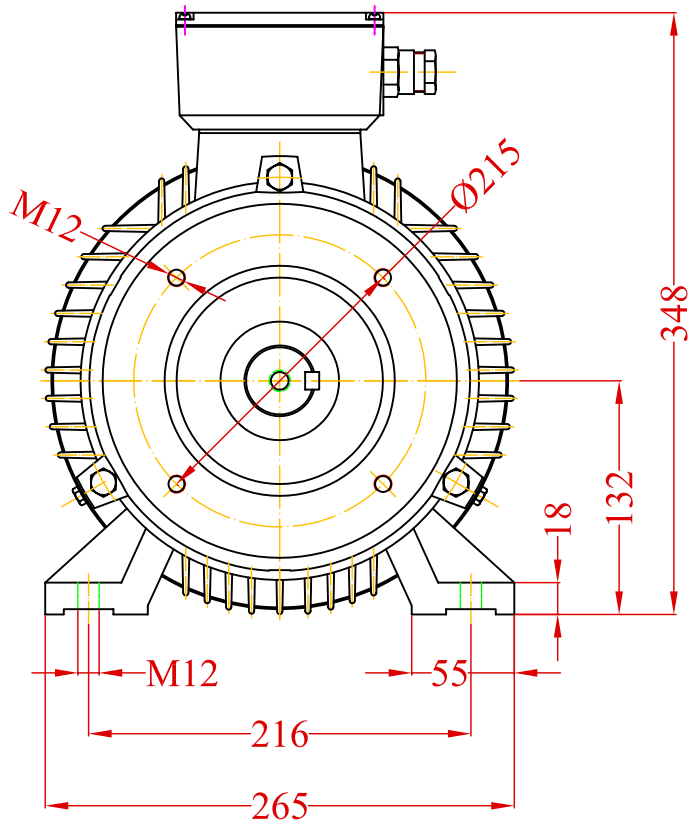

A-A

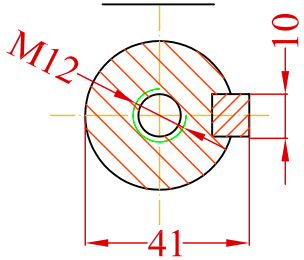

				Date	Signature	
			Designed by			Weight
			Checked by			
			Examine by			
			SCALE			
CHANGE	DATE	NAME				

VALIADIS
HELLENIC MOTORS

MOTOR TYPE K132S
MOUNTING B34B
WITH FORCED COOLING KIT

Desing Number

Replaced from

Replace the