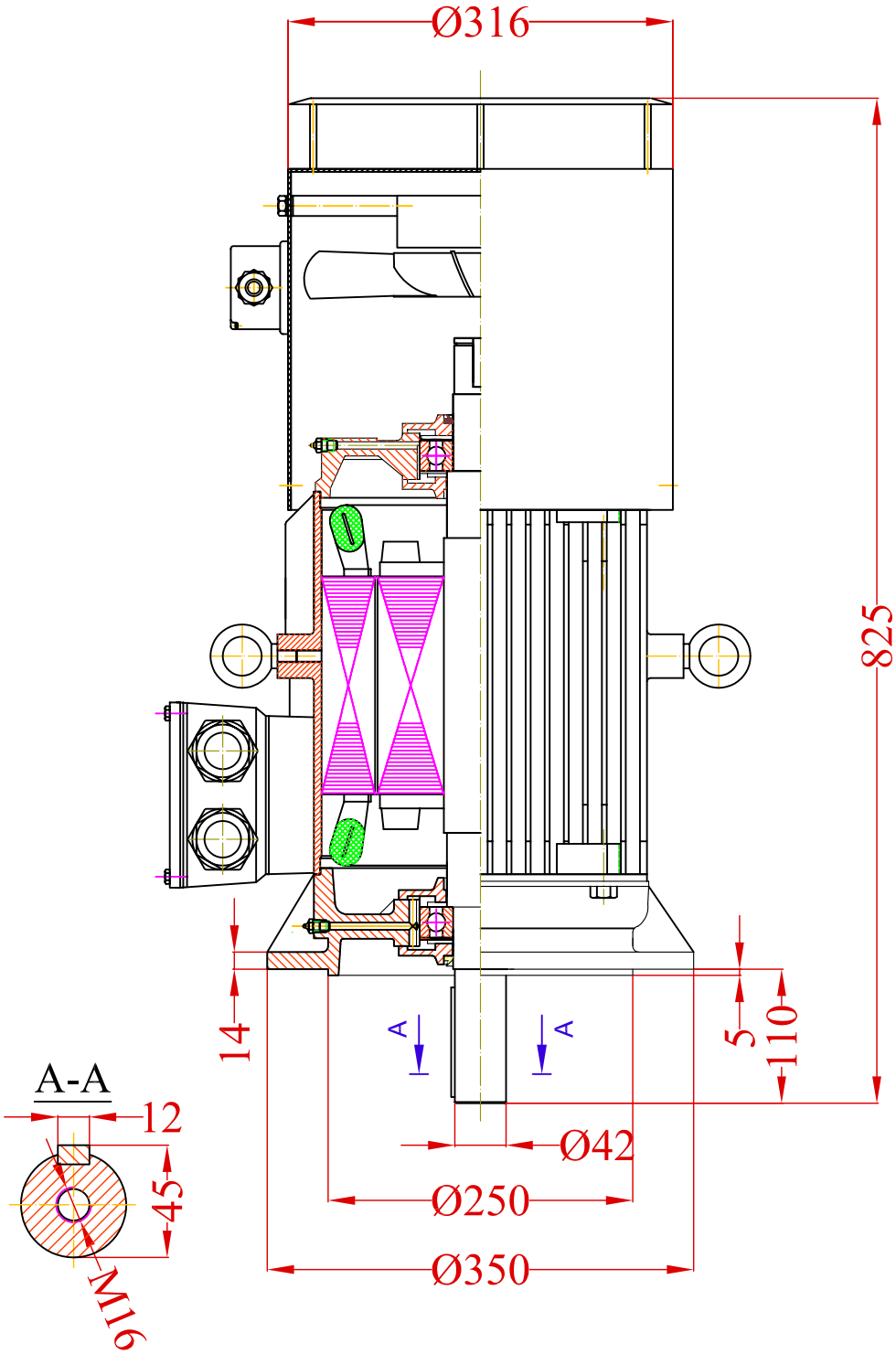

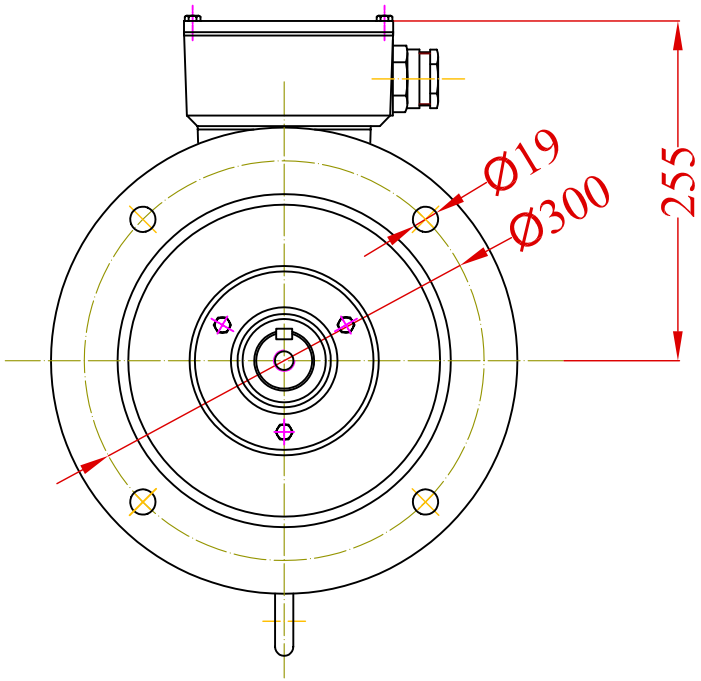

			Designed by	Date	Signature	VALIADIS HELLENIC MOTORS
			Checked by			
			Examine by		Weight	
			SCALE	MOTOR TYPE K160L MOUNTING V1 WITH FORCED COOLING KIT		Design Number
						Replaced from
CHANGE	DATE	NAME				Replace the