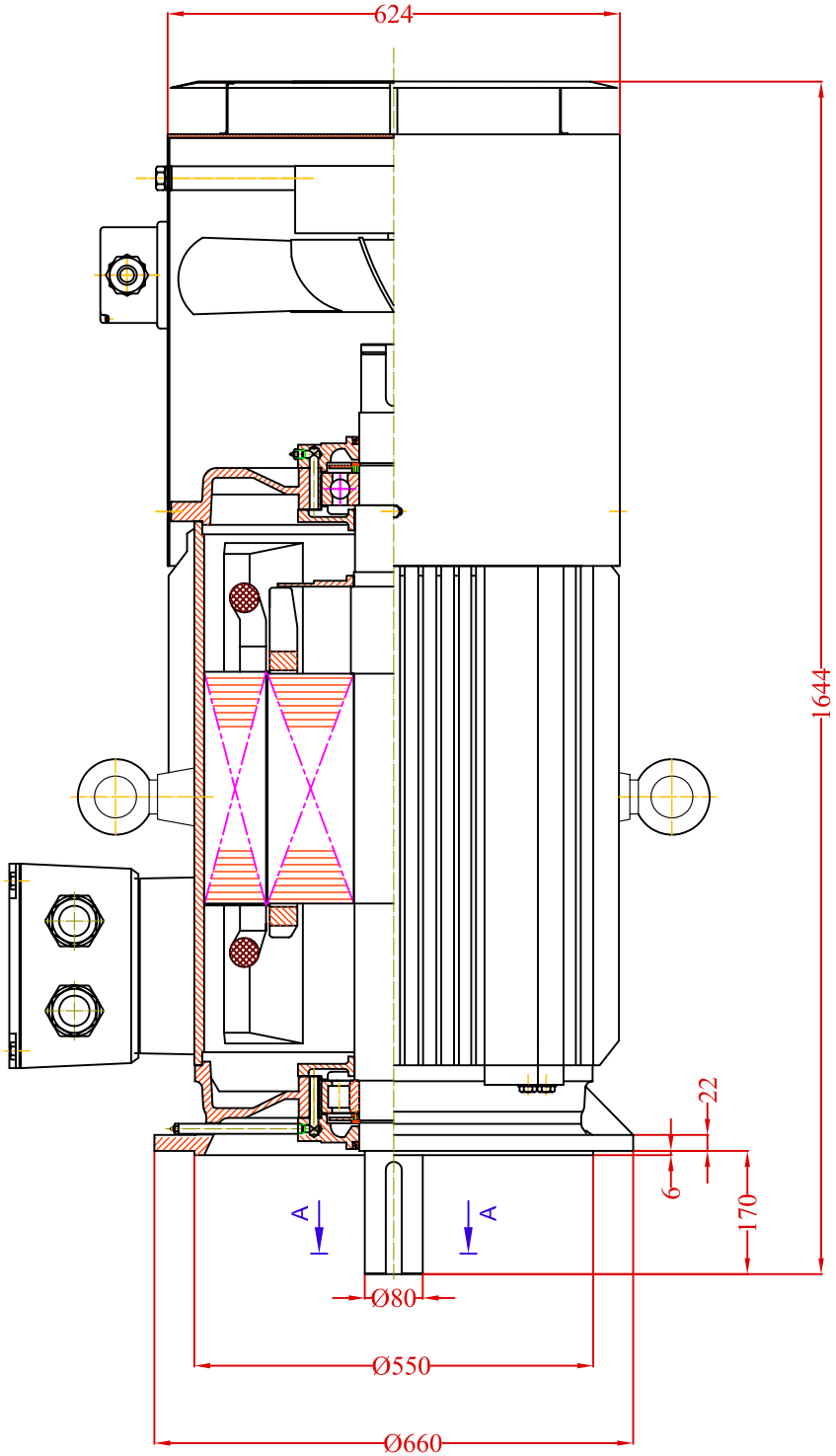

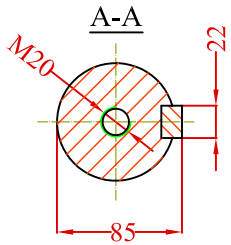

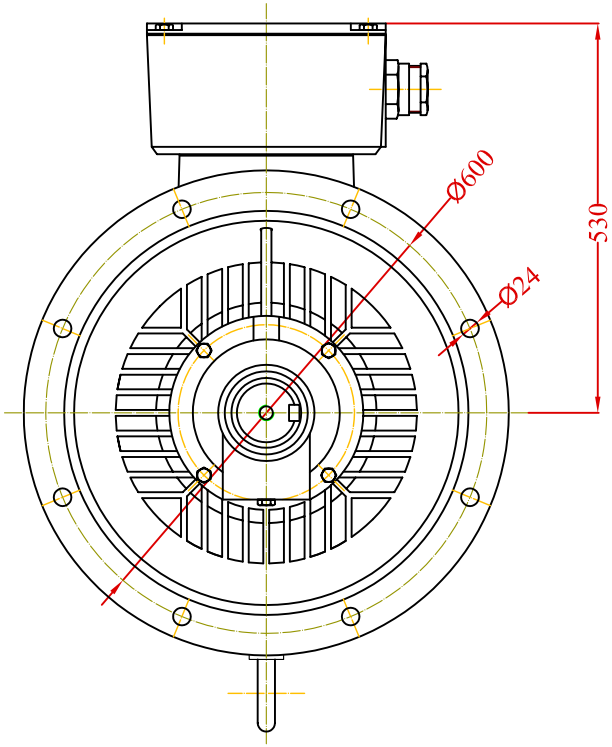

				Date	Signature		VALIADIS HELLENIC MOTORS
			Designed by				
			Checked by			Weight	
			Examine by				
			SCALE	MOTOR TYPE K315M-4-6-8 MOUNTING V1 WITH FORCED COOLING KIT			Desing Number
							Replaced from
CHANGE	DATE	NAME					Replace the