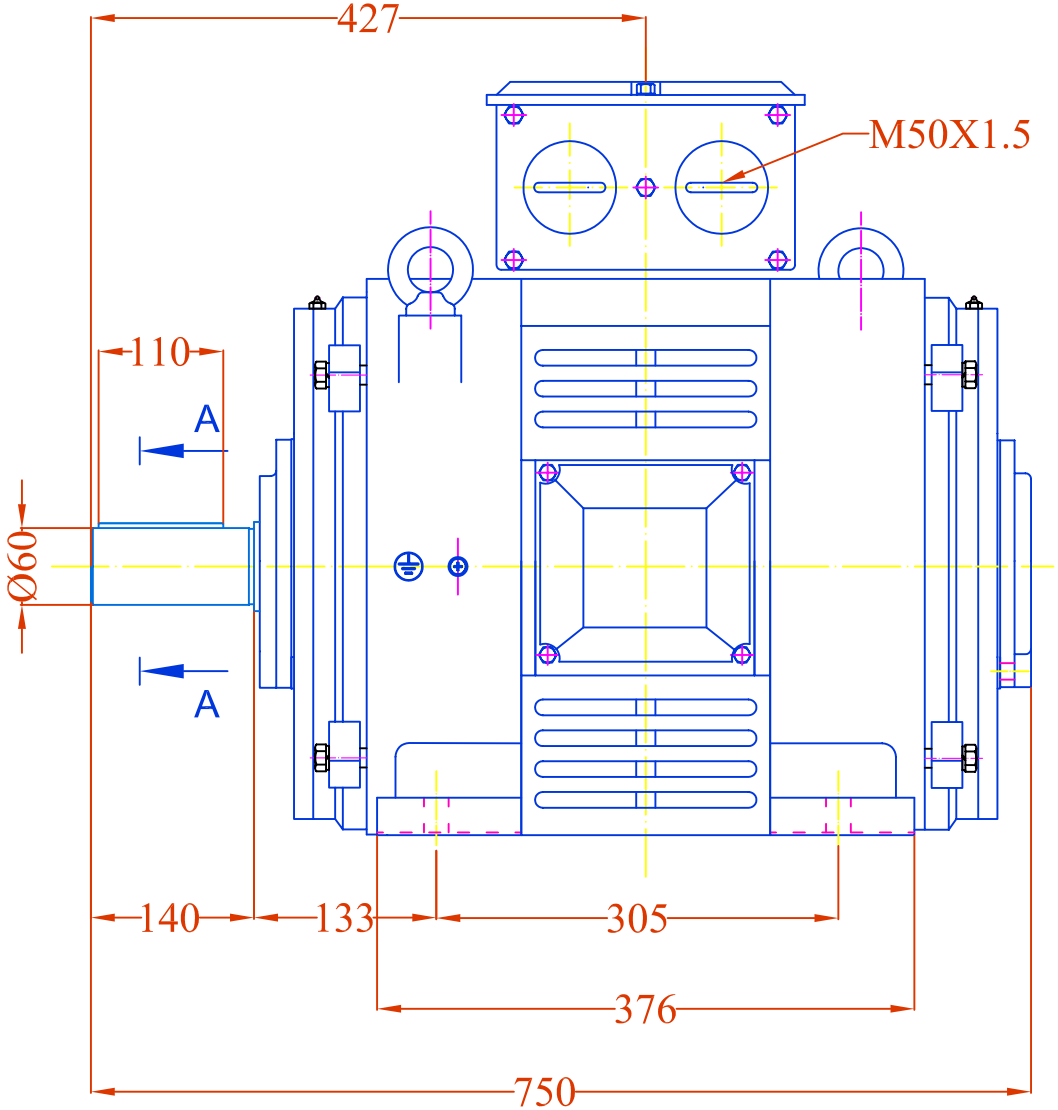

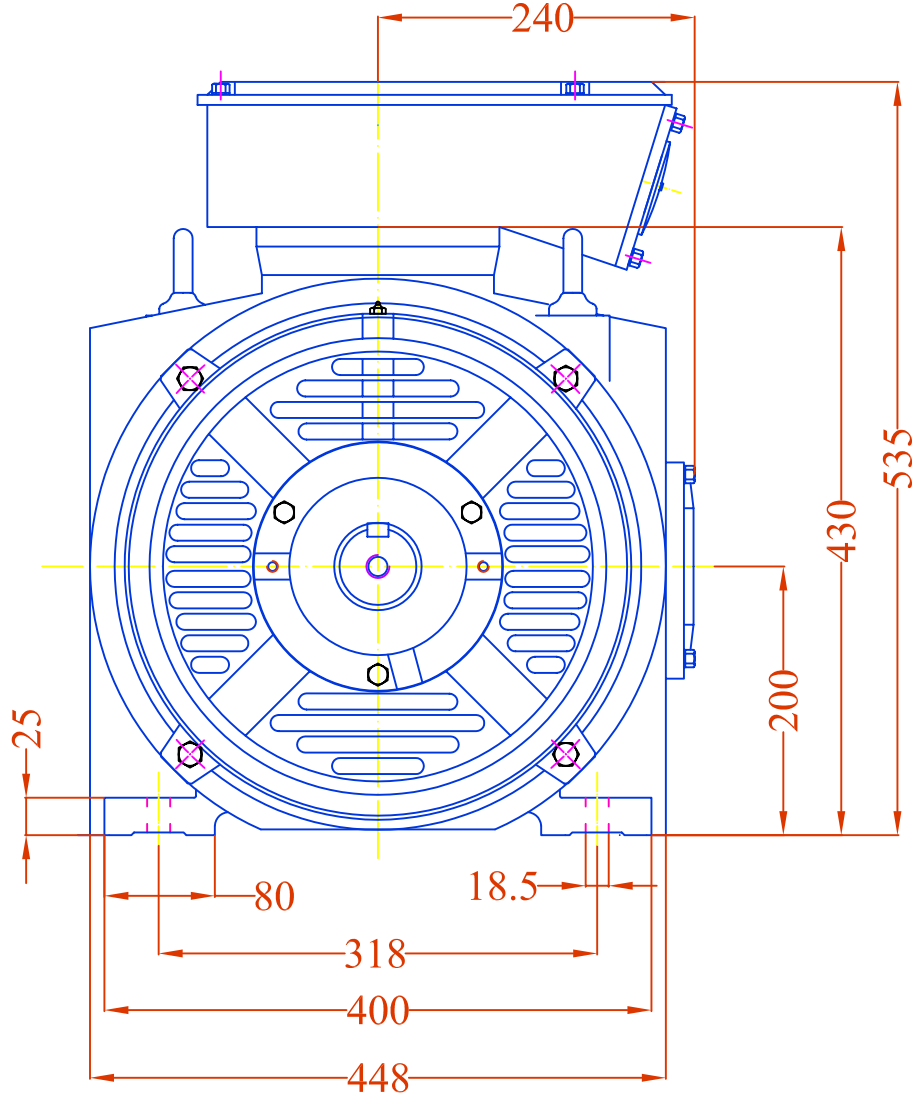

A-A
2:1

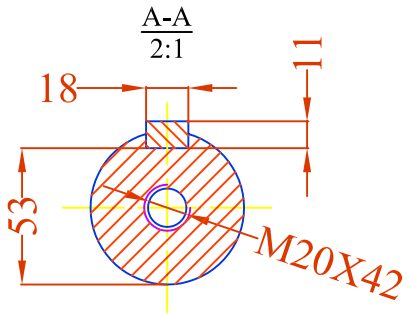

				Date	Signature	
			Designed by			Weight
			Checked by			
			Examine by			
			SCALE	MOTOR TYPE: AB200L MOUNTING: B3		
CHANGE	DATE	NAME				

VALIADIS
HELLENIC MOTORS

Design Number

Replaced from

Replace the