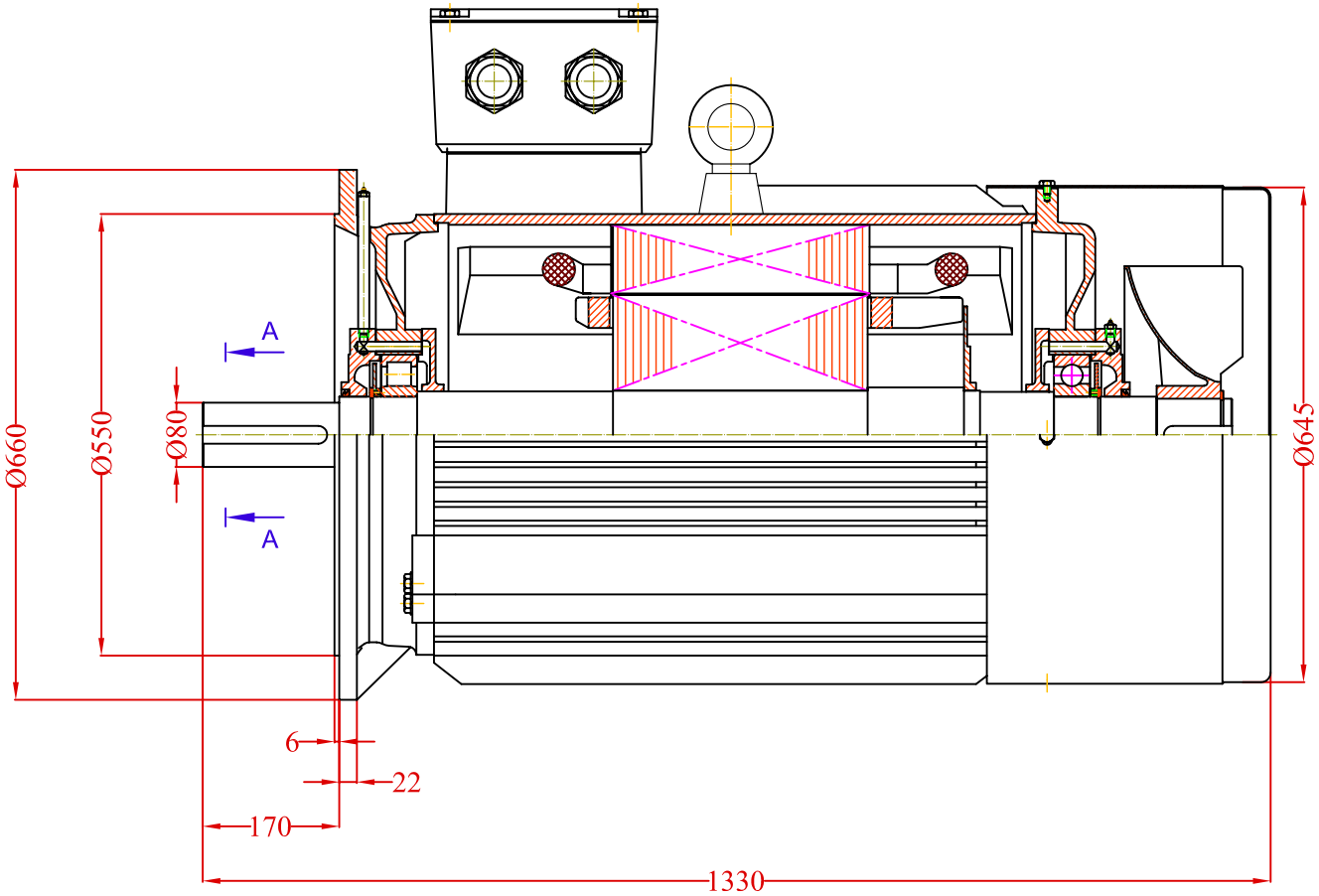

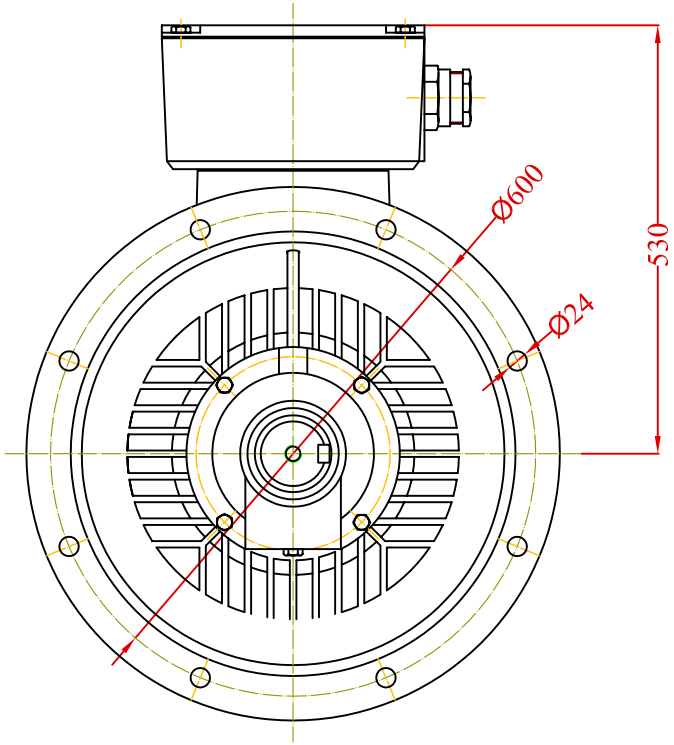

A-A

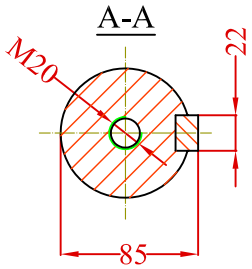

				Date	Signature		
			Designed by				VALIADIS
			Checked by			Weight	HELLENIC MOTORS
			Examine by				
			SCALE	MOTOR TYPE K315M-4-6-8			Design Number
				MOUNTING B5			Replaced from
CHANGE	DATE	NAME					Replace the