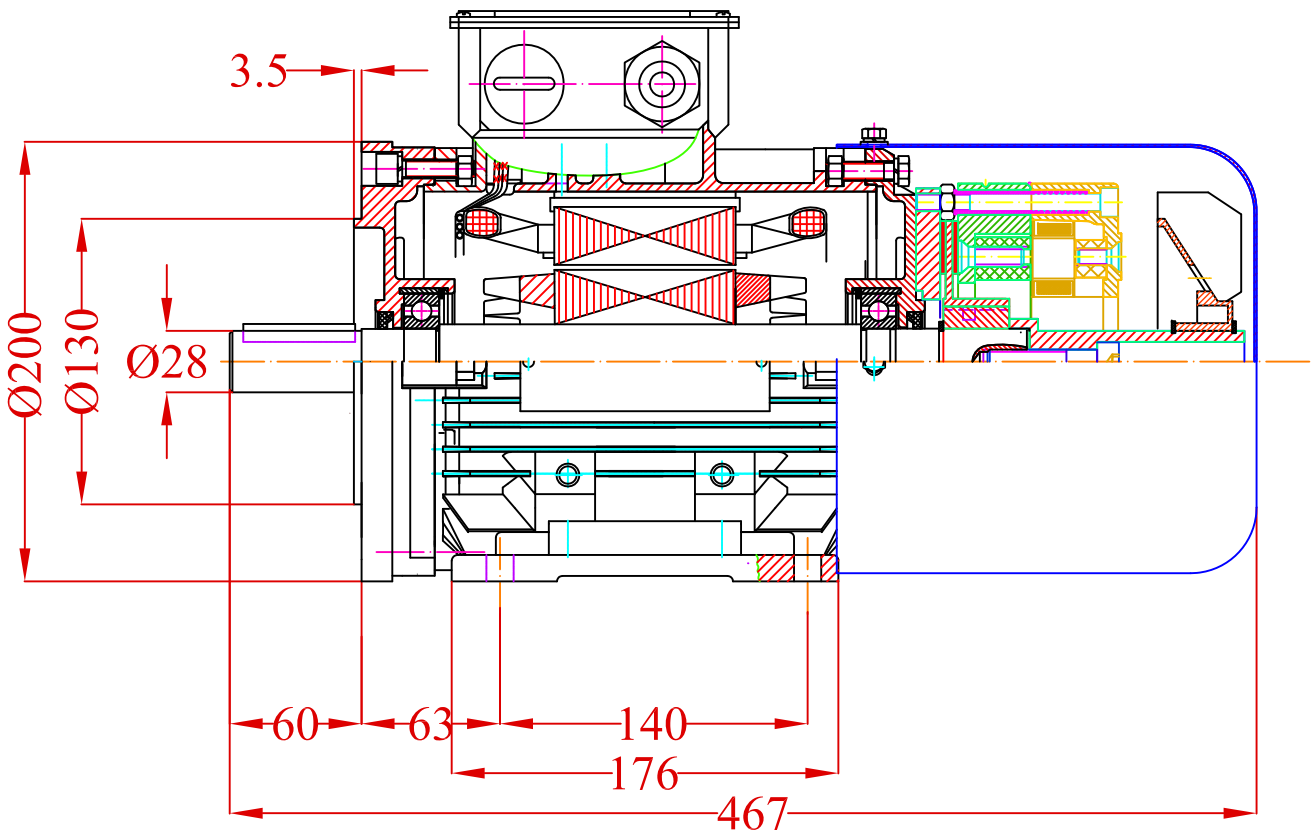

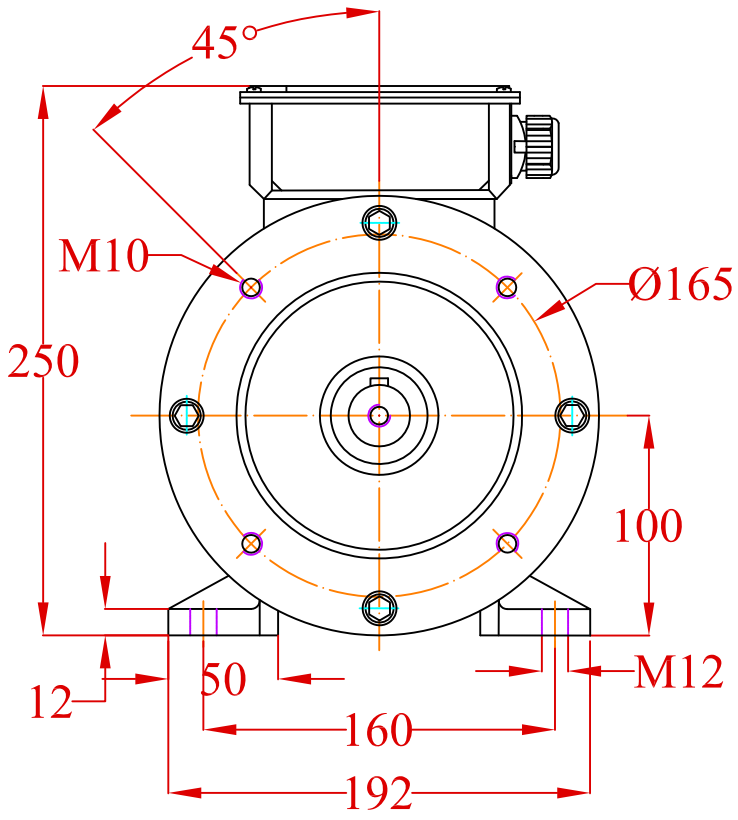

A-A

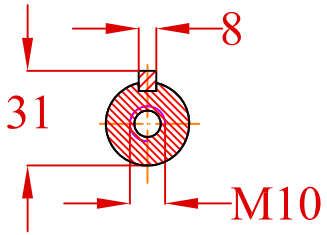

				Date	Signature	
			Designed by			
			Checked by			Weight
			Examine by			
			SCALE	Motor Type : AK100L Mounting : B34B with brake type AC6		
CHANGE	DATE	NAME				

VALIADIS
HELLENIC MOTORS

Design Number

Replaced from

Replace the