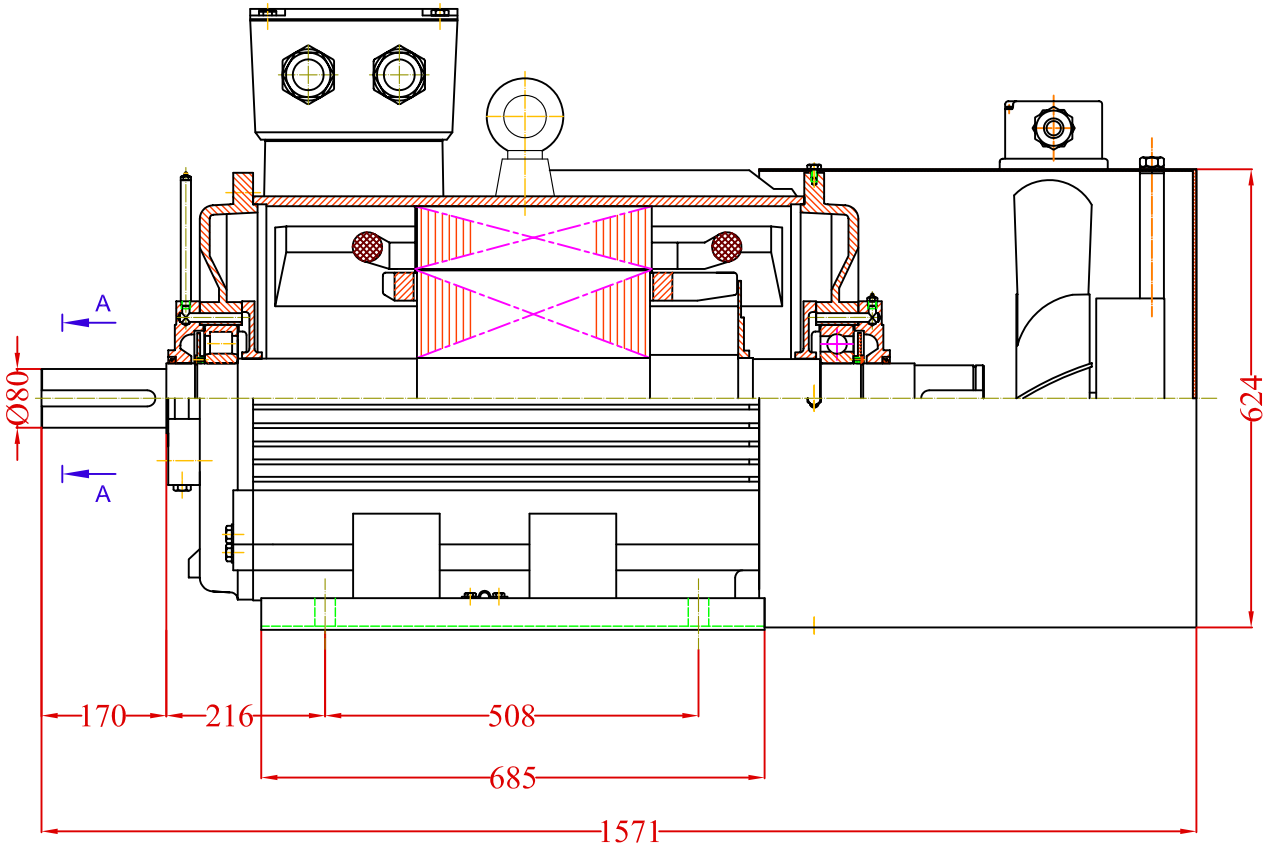


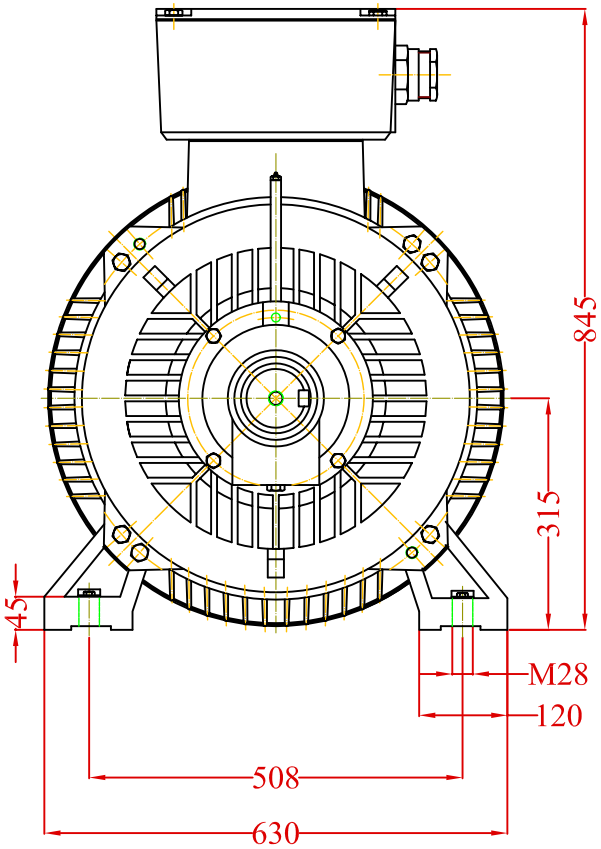


A-A

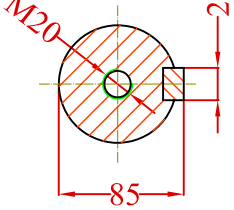


| CHANGE | DATE | NAME |
|---|---|---|
| | | |

| | Date | Signature | |
|---|---|---|---|
| Designed by | | | |
| Checked by | | | Weight |
| Examine by | | | |
| SCALE | | | |

VALIADIS
HELLENIC MOTORS

MOTOR TYPE K315L-4-6-8
MOUNTING B3
WITH FORCED COOLING KIT

Desing Number

Replaced from

Replace the