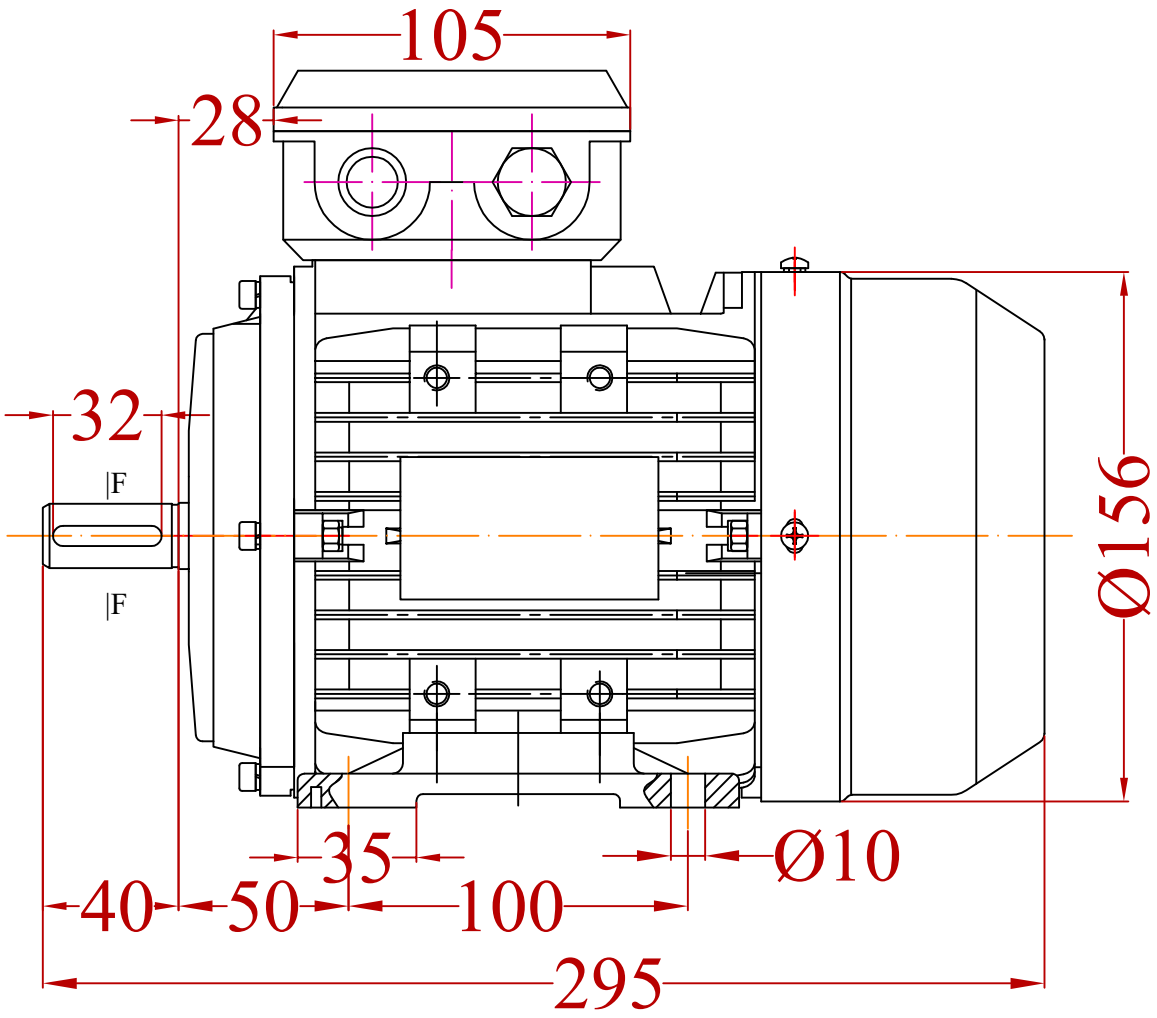

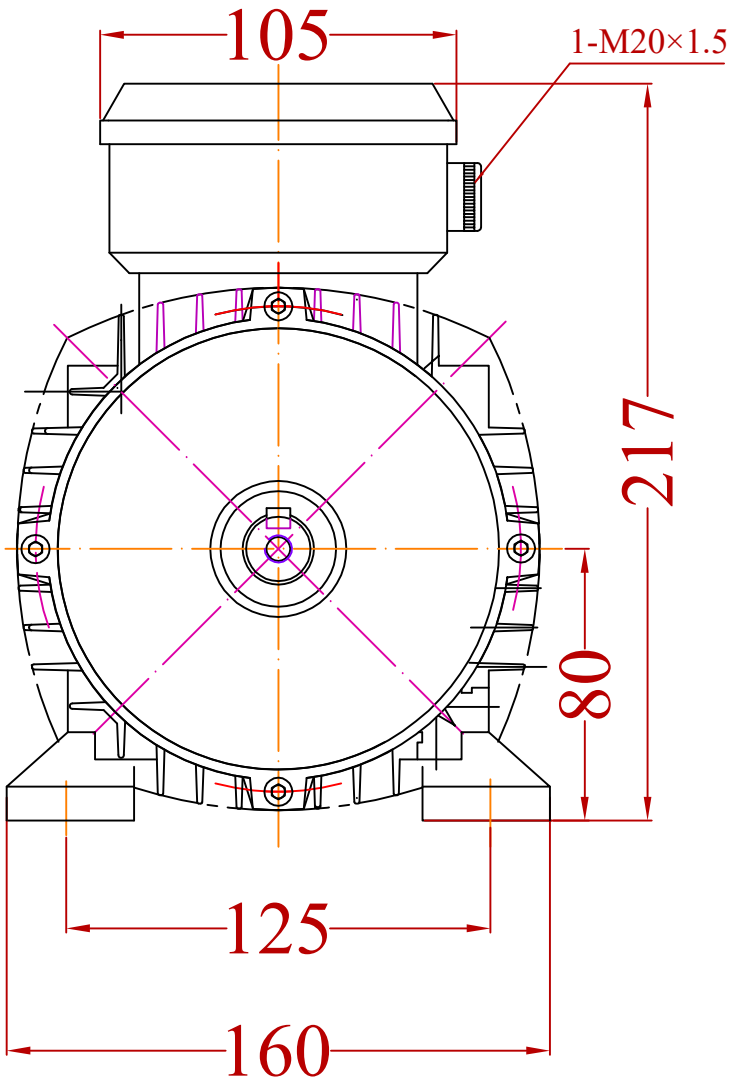

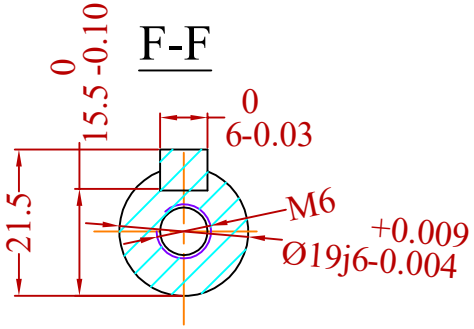

				Date	Signature		
			Designed by	27/11/17	St.Karageorgis		VALIADIS HELLENIC MOTORS
			Checked by				
			Examine by				
			SCALE	Motor Type :AK 80 Mounting : B3			Design Number : MTAK-171127-1
							Replaced from
Change	Date	Name					Replace the