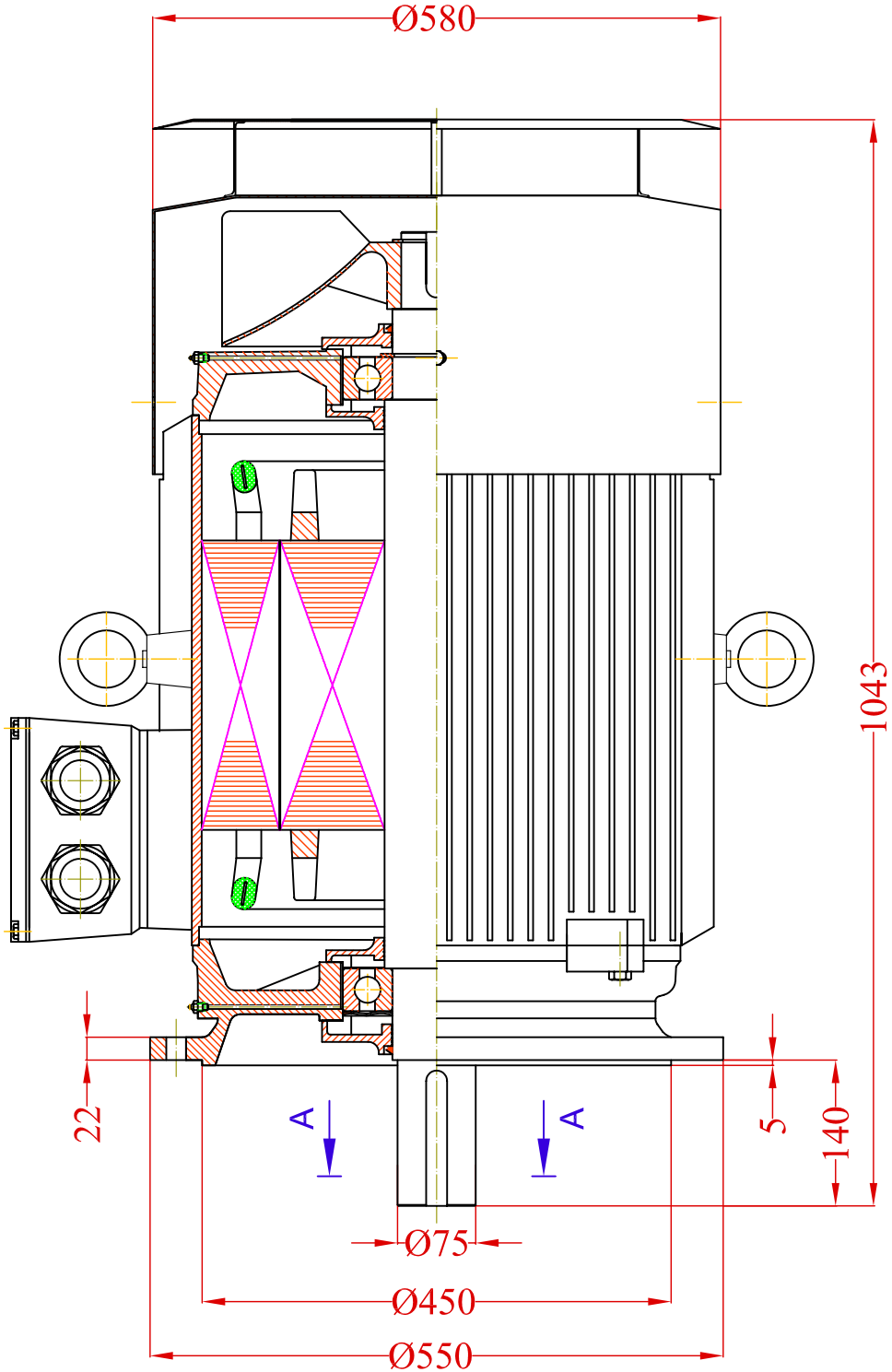

A-A

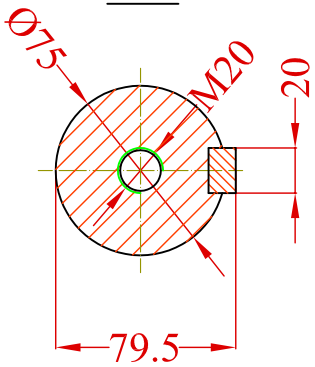

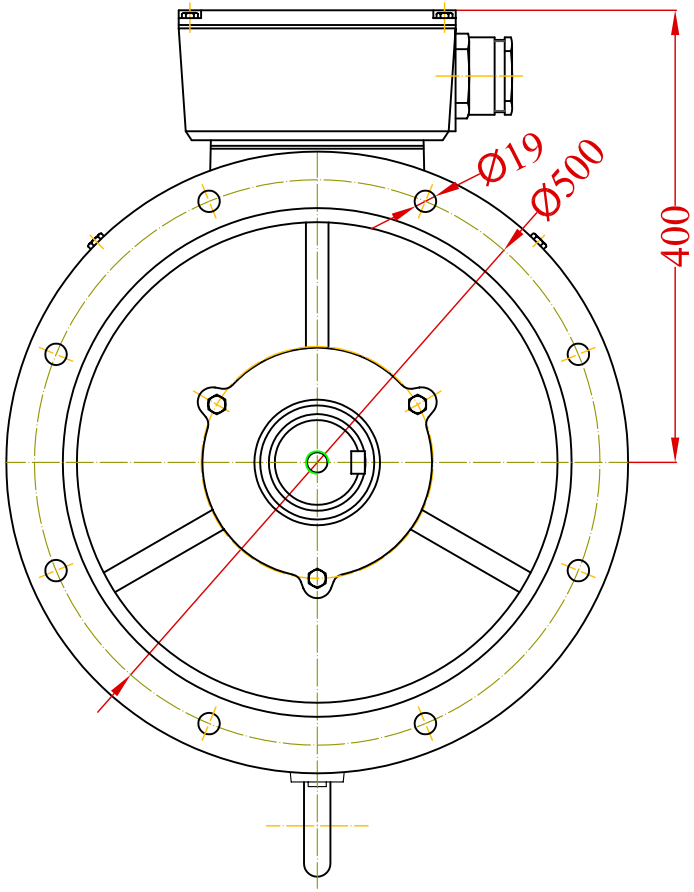

				Date	Signature		VALIADIS HELLENIC MOTORS
			Designed by				
			Checked by			Weight	
			Examine by				
			SCALE	MOTOR TYPE K280S-4-6-8 MOUNTING V1			Design Number
							Replaced from
CHANGE	DATE	NAME					Replace the