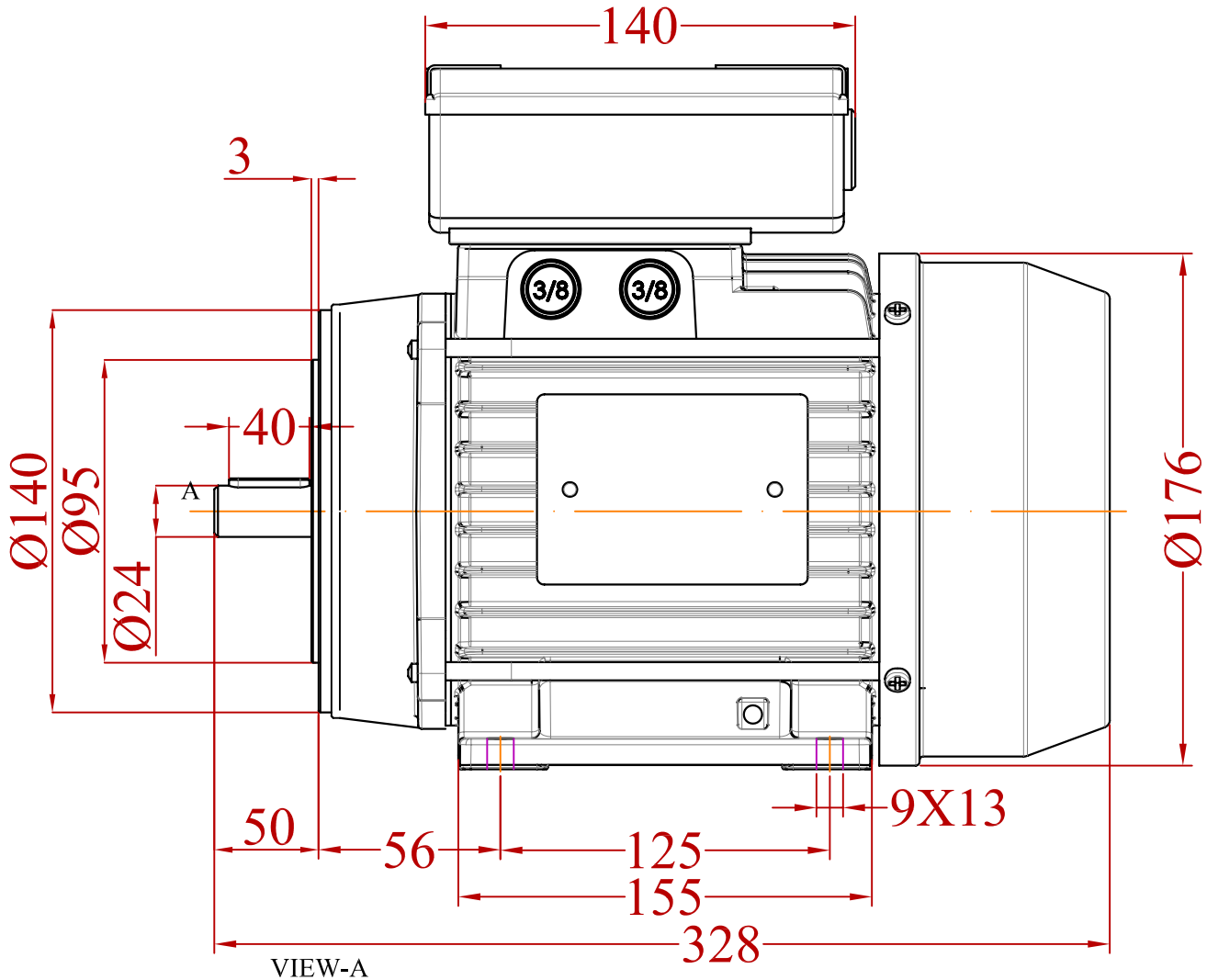

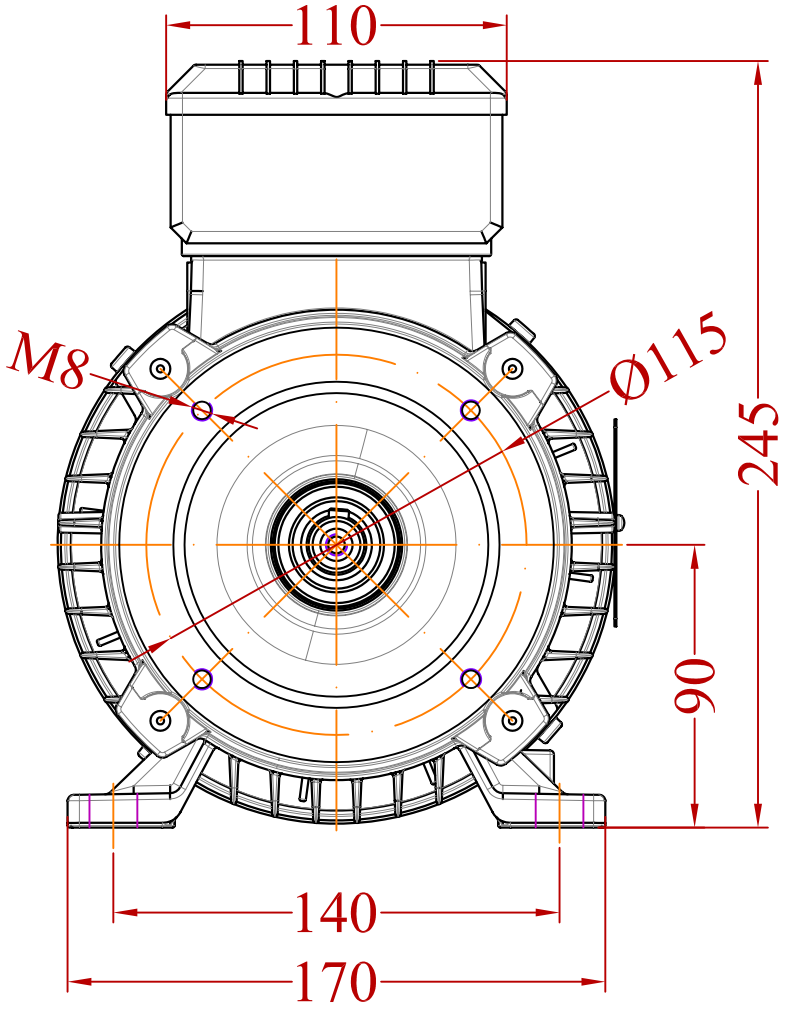

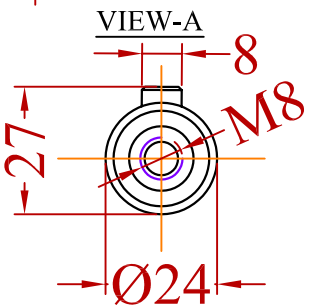

Change	Date	Name

	Date	Signature
Designed by	04/11/15	St.Karageorgis
Checked by		
Examine by		
SCALE		

VALIADIS
HELLENIC MOTORS

Motor Type :MK90L
Mounting :B34

Design Number :
MTMK-151215-8

Replaced from

Replace the