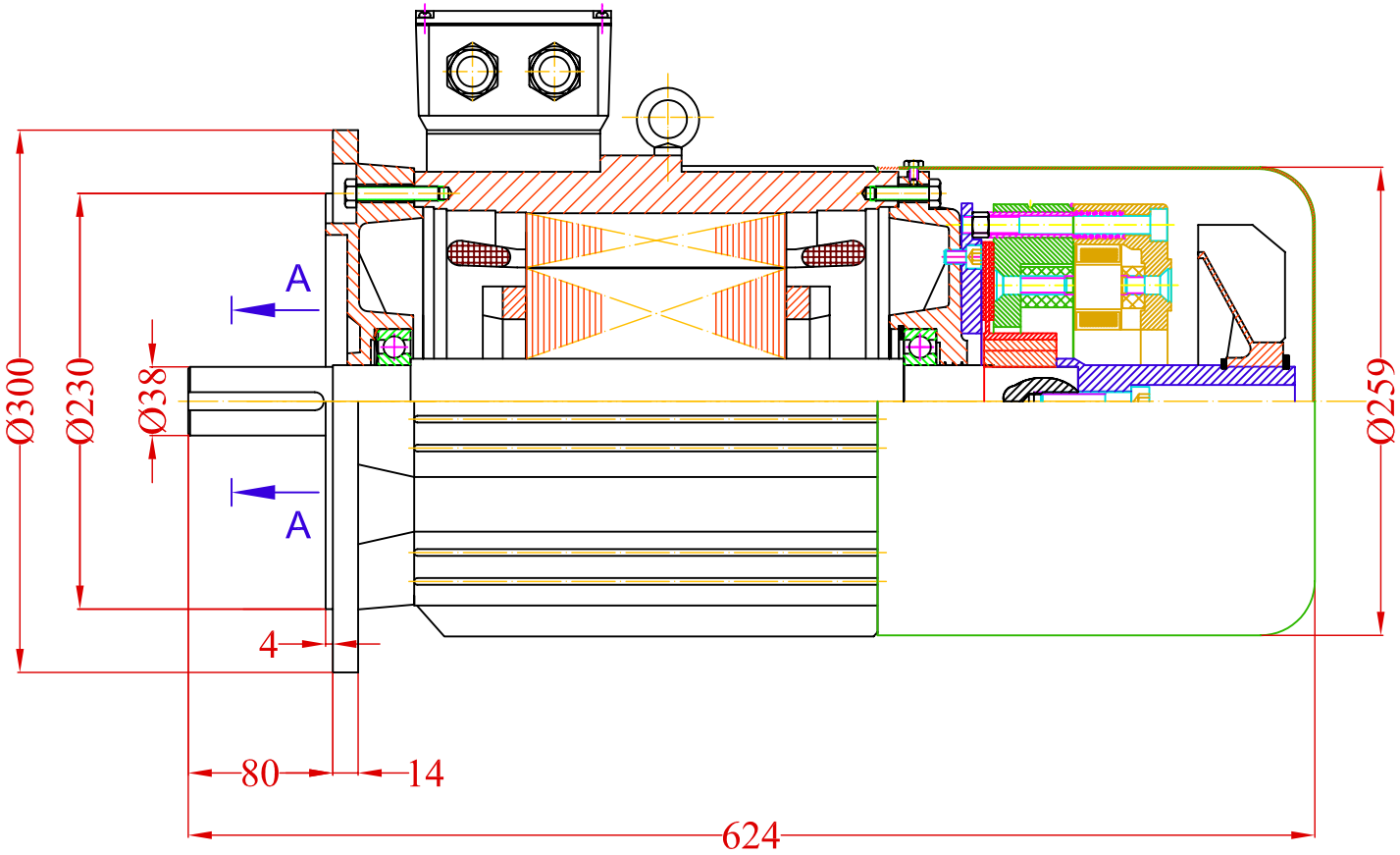

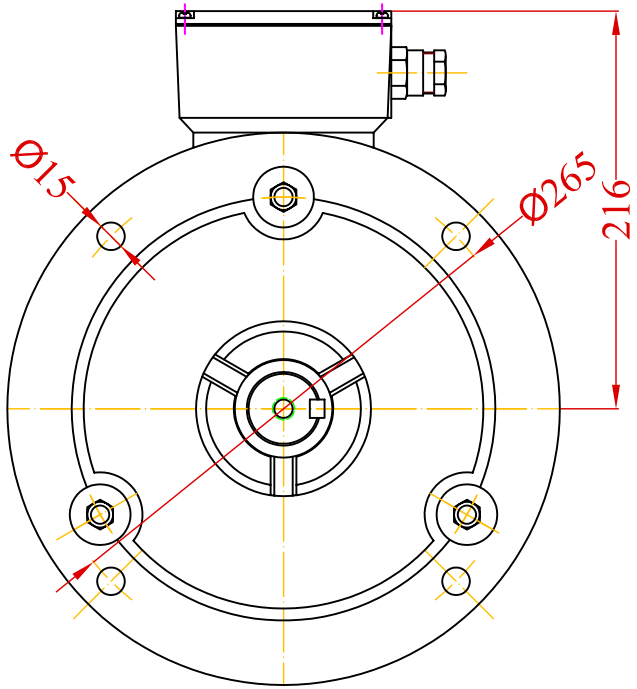

A-A

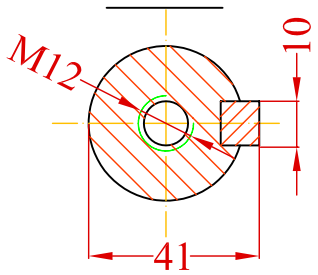

				Date	Signature	
			Designed by			
			Checked by			Weight
			Examine by			
			SCALE	MOTOR TYPE K132M MOUNTING B5 WITH BRAKE AC08		
CHANGE	DATE	NAME				

VALIADIS
HELLENIC MOTORS

Desing Number

Replaced from

Replace the